FTS SUBMERSIBLE PRESSURE TRANSDUCER

USER'S MANUAL

TABLE OF CONTENTS

PRODUCT OVERVIEW

The FTS Submersible PT is a high accuracy submersible pressure transducer. With additional features that provide enhanced functionality, including dual outputs; i.e., one analog (4...20mA, 0...5 VDC, 0...10VDC) and one digital (RS485). The RS485 interface provides level and temperature information. Also, it allows the user to rescale the analog output from 10...110% of the basic range. Additionally, the FTS Submersible PT is capable of a standard accuracy of 0.25% BR TEB and an optional 0.1% BR TEB. The FTS Submersible PT can be manufactured in 316L stainless steel or titanium for increased resistance to corrosion, notably from seawater.

I - USE AND CARE:

Supply Voltage - Adequate supply voltage is critical to ensure proper operation of 4-20 mA pressure and level transducers. Without the minimum required voltage available at the transducer, the transducer will not output the correct analog value.

Many analog transducers will appear to operate properly even when the supply voltage is not adequate to power the loop when the transducer should be outputting 20 mA. For example, a 10 volt supply may appear to be enough to power an analog transducer when it is outputting 4 mA with zero pressure applied, but as the transducer's output increases with increasing pressure, voltage drops across other devices in the loop (analog input devices, cable and/or external barrier devices) may reduce the supply voltage to the transducer and prevent it from providing the correct output above a certain input pressure/level threshold.

4-20 mA pressure and level transducers feature microprocessor-based signal conditioning. During power up, the circuit performs a check sequence which determines whether there is sufficient supply voltage to power all devices on the loop, by setting the output to ~110% of the maximum value, i.e., ~22.5mA. If the supply voltage is not sufficient to supply 22.5 mA to the circuit, then the maximum possible current will be seen on the analog output, e.g., 17 mA, and the transducer will not initiate normal operation.

The benefit of this technology is that total loop impedance is accounted for prior to placing the equipment into service, preventing false indications when the voltage supply is insufficient to support the loop with maximum pressure applied.

Most current loops contain analog input devices, indicators or other components having input impedances which must be considered when calculating the supply voltages needed. For example an analog input device with a 250 Ohm Input Impedance will require an additional voltage of 5.5 VDC (250 x 0.022 = 5.5) in addition to the minimum supply voltage necessary for the transducer to operate properly over the entire range.

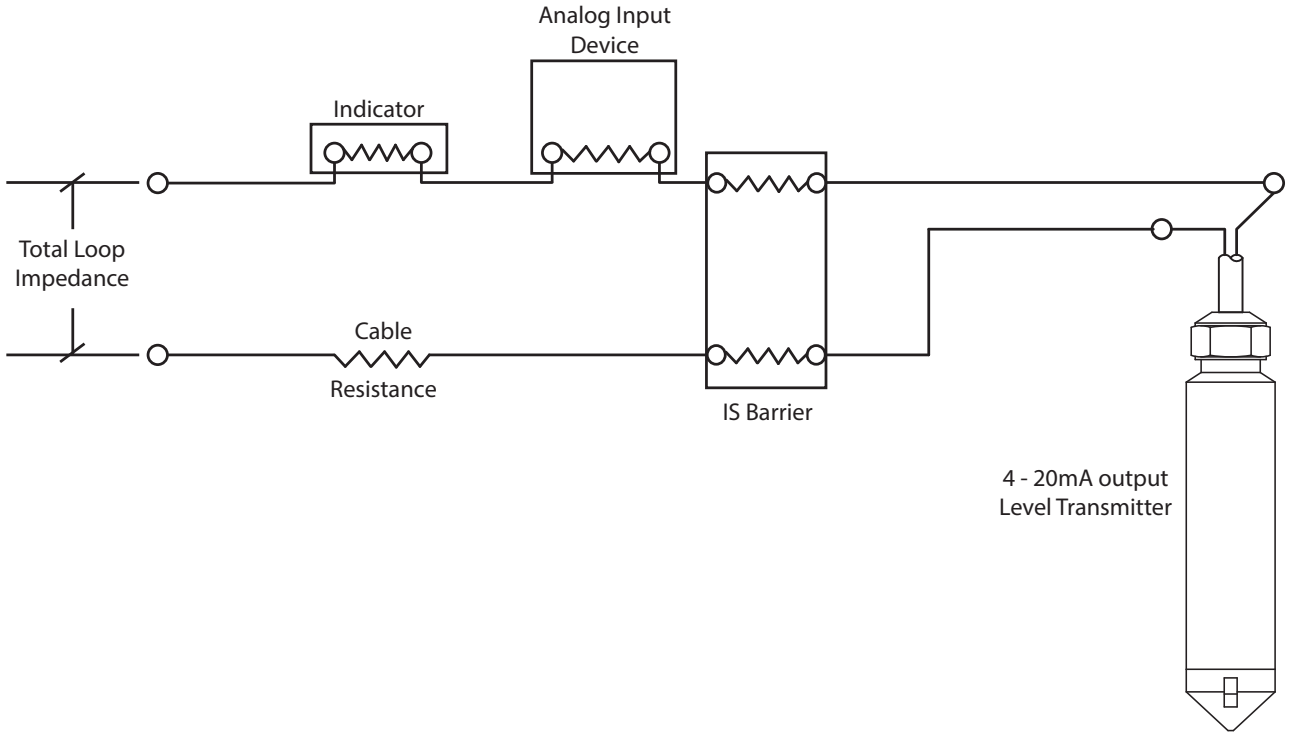

The calculations below are useful in identifying the minimum supply voltage needed for a current loop with additional line impedances or conversely, the maximum current loop impedance allowed for a given supply voltage.

Minimum supply voltage with lightning protection option installed: 11 VDC + (Total loop impedance x 0.022)

Minimum supply voltage without lightning protection option installed: 8 VDC + (Total loop Impedance x 0.022)

Maximum allowable loop impedance with lightning protection option installed: (Supply VDC – 11 VDC) / 0.022

Maximum allowable loop impedance without lightning protection option installed: (Supply VDC – 8 VDC) / 0.022

Safe Handling - Safe handling of pressure measurement devices is accomplished if a nominal amount of care is taken.

THINGS TO AVOID ARE:

• Sharp impact against hard surfaces

• Contact with chemicals known to be corrosive to the materials of construction

• Probing of pressure sensing membrane with ANYTHING

Limits of Pressure - pressure sensors, transducers and transmitters are designed to withstand a certain amount of overpressure without damage or calibration shift. It can range from 15X for the lower pressure ranges to 1.1X for the highest ranges. This value is different for each product and is referred to in the product literature as "Over pressure". It is the user's responsibility to ensure that the proper product is chosen for the particular pressure conditions expected.

Environmental conditions - Each product is designed to be compatible with a particular environment. It is the user's responsibility to ensure that the product is not exposed to an environmental condition for which it is not designed. These conditions can include operating temperature range and exposure to high-pressure water jets, media not compatible with the materials of construction, submergence of transducers not designed for that purpose, or potentially explosive atmospheres. An engineer can help the user determine the correct choice of enclosure to suit the particular application.

Electrical conditions - Each product is designed to operate properly within a specific range of electrical conditions. The specific product label defines the rating(s), if any, that applies to the product to which it is affixed. All transducers are designed to withstand reverse polarity as well as over voltage to a certain extent. It is the user's responsibility to ensure that all electrical connections are made to the products in accordance with recommendations as well as local electrical code. Wire colors or connector pin-outs are either printed on the label affixed to the product or provided separately.

Cleaning - Regarding media-isolated products, should the pressure input to the sensor, transducer or transmitter become fouled, it may be cleaned in the following manner. In the simplest case, and depending upon the specific product in question, the device should be slowly lowered membrane-first into a solution of warm, soapy water. Care should be taken not to submerge the entire device, unless it is specifically designed for continuous submergence. Agitate the solution with the device and the fouling should disperse after a time. Continue agitating until the input to the device is clear. Should the fouling be of a nature that it cannot be dissolved with soapy water, use of a solvent is recommended, but only after compatibility with any o-ring seals in the product is determined. Follow the solvent manufacturer's recommendations for safe handling.

WARNING! Under no circumstances should the membrane or pressure input port to the device be probed with any object. Damage to the sensing membrane is permanent and, in most cases, requires repair or replacement.

II - INSTALLATION:

The following is important installation and general maintenance information for submersible transducers. Please contact FTS for additional instruction.

1. **Transducer Anchoring** - It is recommended that submersible transducers be installed in a stilling well or attached to rigid conduit via a conduit fitting integral to the transducer, in order to prevent damage to the transducer from impact with immovable objects. It is not advisable to tie the transducer to a pump or to piping, as any problem with the transducer could require that the pump be pulled from the installation.

Some applications require the transducer to be suspended without a protective stilling well or conduit attachment. In all installations, care should be taken to prevent damage to the submersible cable.

2. **Transducer Submersion** - Damage to submersible cable can lead to failure of the transducer. The product employs a rugged cable jacket materials to minimize the risk of cuts and abrasion. Still, take care when lowering your transducer into the well, making sure the cable does not drag over sharp edges. Avoid dropping the transducer from the surface.
3. **Condensation protection** - The cable vent size has been optimized to minimize the occurrence of water vapor incursion. In areas of high humidity, it may be desirable to use a Drying Tube Assembly (desiccant) or Bellows Assembly to prevent water vapor from entering the vent tube. Contact FTS for ordering information.
4. **Bending of Cable** - Our jacketed cable is quite flexible. However, care must be taken to ensure the vent tube integral to the cable is not crimped when bending the cable to suit your installation. It is recommended that the cable not be bent to a radius smaller than 1 inch.
5. **Cable Compression** - Many users employ a compression fitting to secure our cable as it enters a junction box. Care must be taken that the fitting is not over tightened, causing damage to the cable and/or crimping the vent tube.
6. **Position Sensitivity** - The transducer should be installed in a vertical position, otherwise it may exhibit an offset. If the transducer must be installed in any position other than vertical, measure the output with no pressure applied prior to connection to your display, PLC, or controller. Use the measured value for your zero point.

III - GENERAL MAINTENANCE TIPS:

Cleaning a Clogged Nose Cap - A clogged nose cap could result in erroneous readings from your transducer. Never attempt to clean your transducer's nose cap or diaphragm with a sharp object. This could dent the sensor diaphragm and cause permanent damage to the transducer. To clean the transducer, it is recommended that a soap, scum, and hard-water stain remover be used. Fill a suitable container with the cleaner. Fill another bowl with a mixture of the cleaner and fresh water. Fill a third bowl with fresh water. Beginning with the first bowl, hold the cable about six inches from transducer and stir gently in the solution for 20-30 seconds.

IV - APPENDIX:

2-WIRE CURRENT LOOP

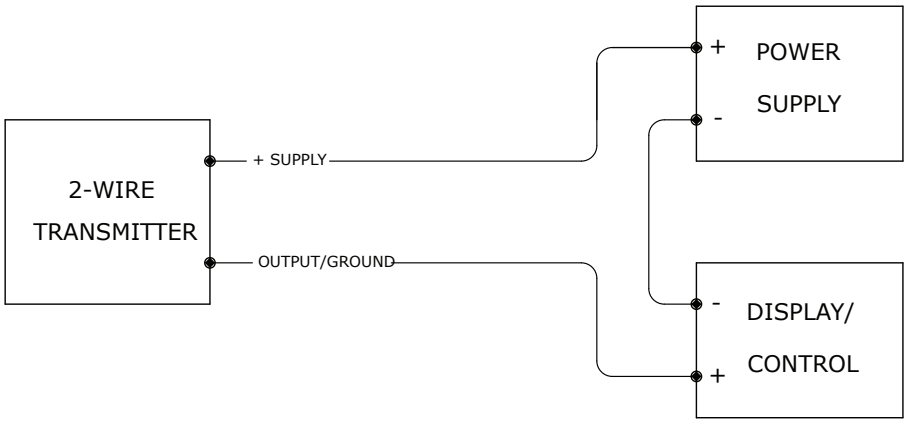

Please refer to Section VII: Use and Care for minimum supply voltage information.

3-WIRE VOLTAGE OUTPUT

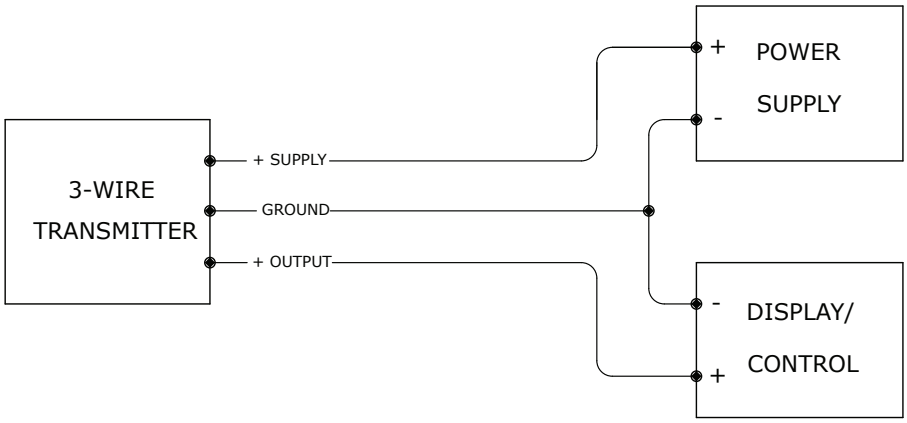

SUBMERSIBLE PT

SUBMERSIBLE PT w/ATTACHED CABLE...4-20mA + RS485

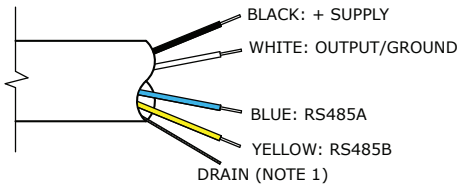

SUBMERSIBLE PT w/ATTACHED CABLE...0-5...10VDC + RS485

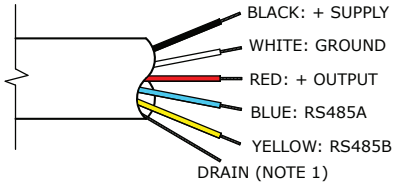

NOTES:

1. FOR LIGHTNING/SURGE PROTECTION TO BE EFFECTIVE, CONNECT DRAIN WIRE TO A LOW-IMPEDANCE EARTH GROUND.
2. DO NOT SUBMERSE ELECTRICAL TERMINATION IN LIQUID. IT WILL DAMAGE THE INSTRUMENT.

SUBMERSIBLE PT:

INSTALLATION TIPS

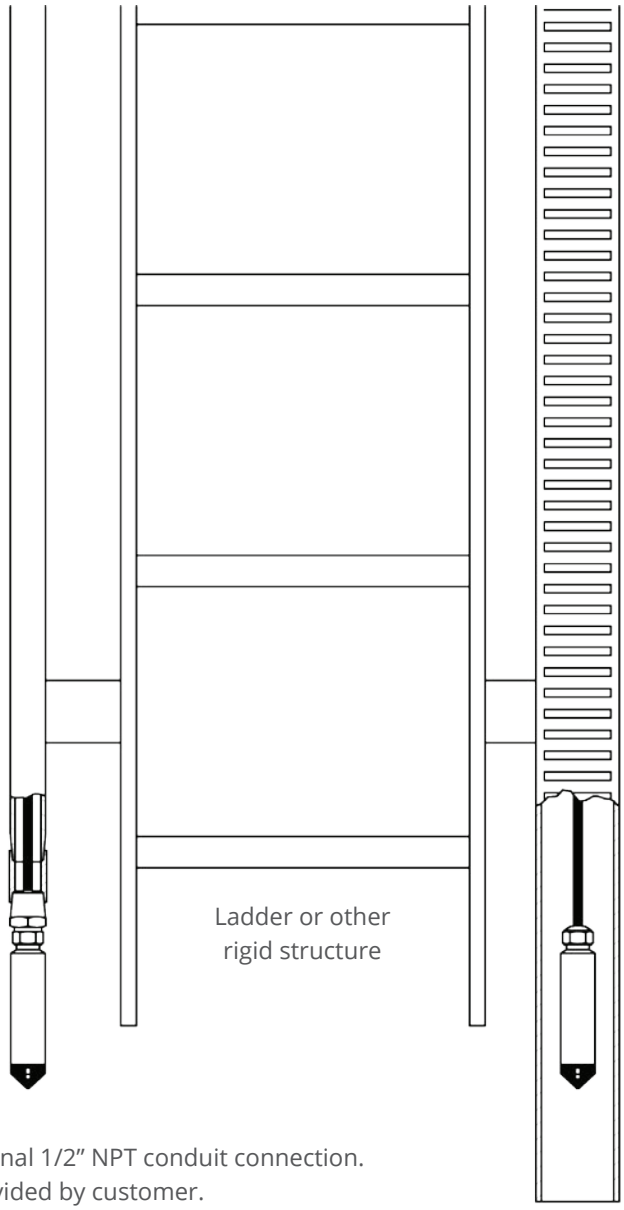

Submersible PT with optional 1/2” NPT conduit connection.
Coupling and conduit provided by customer.

Submersible PT installed in customer-supplied stilling well.

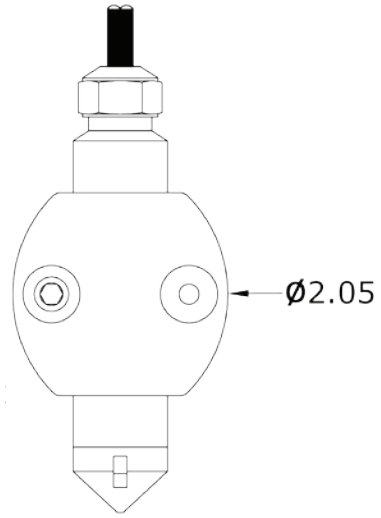

Optional 12oz
stabilizing weight

Minimum bending radius for
submersible cable

CANADA 1065 Henry Eng Place | Victoria, BC | V9B 6B2
USA 1124 Fir Avenue, Suite C | Blaine, WA | 98230
ftsinc.com | 1.800.548.4264

EXTREME ENVIRONMENTS
EXTREMELY RELIABLE